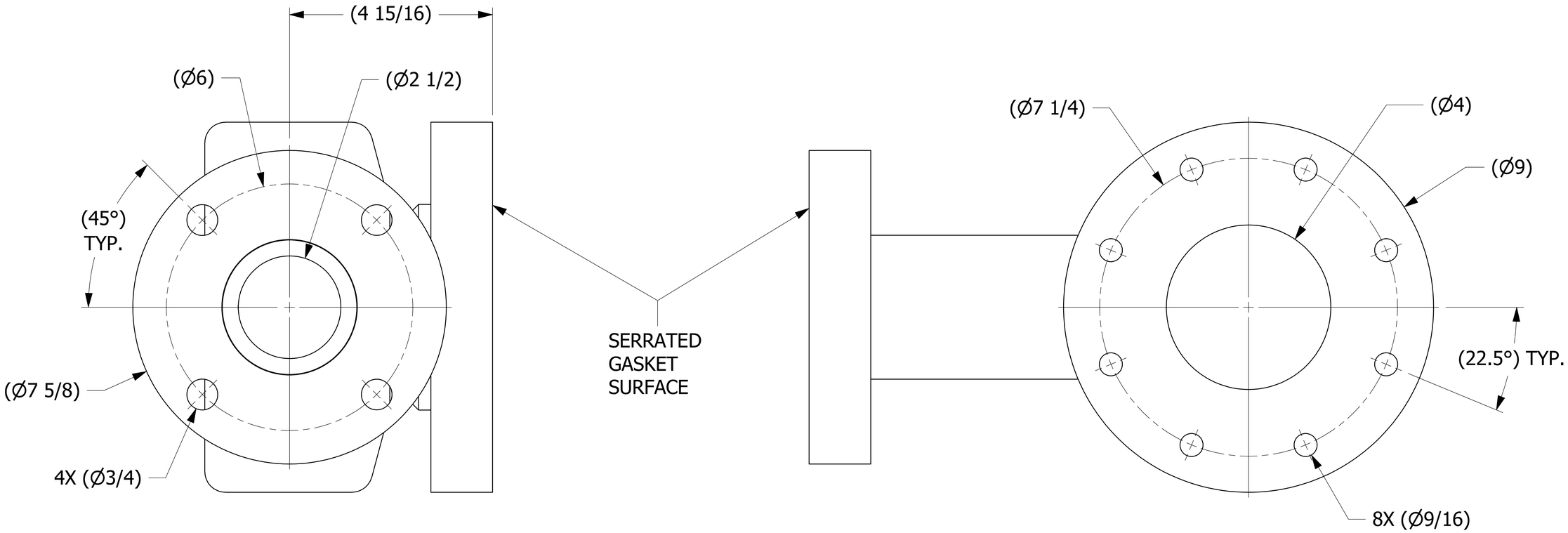

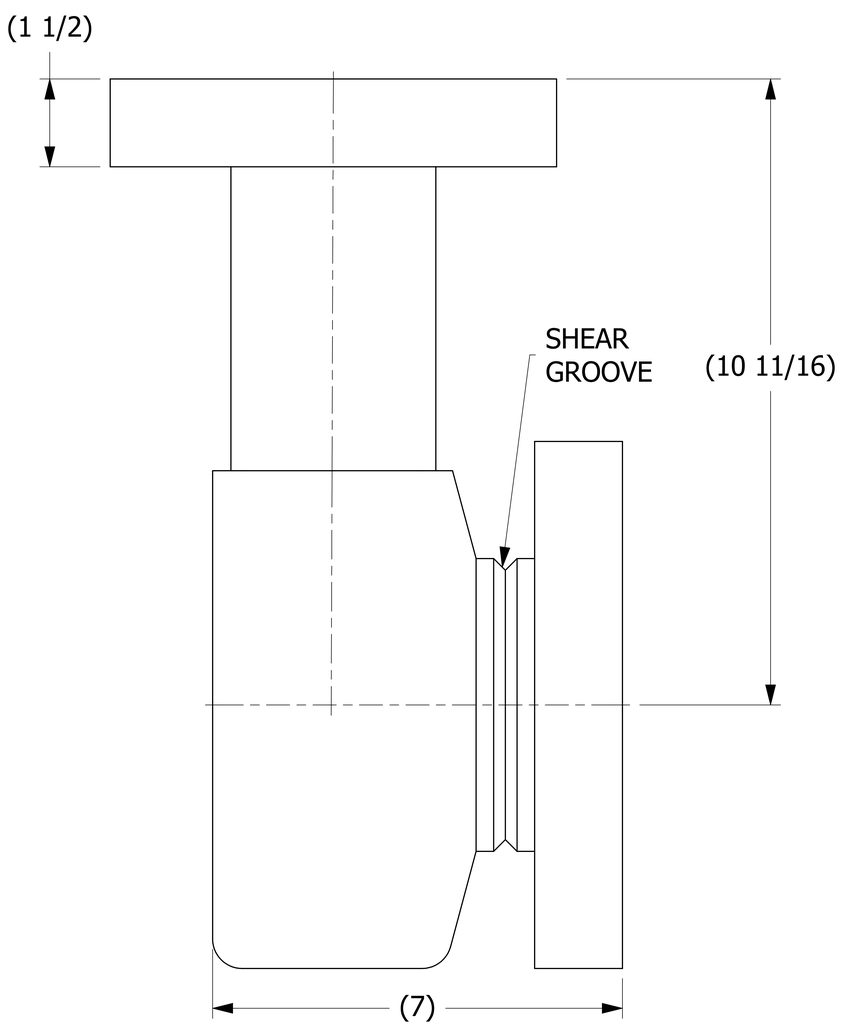

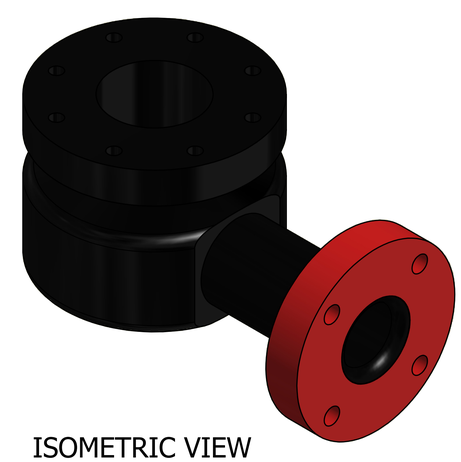

ISOMETRIC VIEW

SALES DRAWING SALES DRAWING

SALES DRAWING SALES DRAWING

REV	BY	DATE	DESCRIPTION
A	TAK	10-26-16	RELEASED FOR PRODUCTION

UNLESS OTHERWISE SPECIFIED
DIMENSIONAL TOLERANCES
FRACTIONAL: ±1/16
X.XX: ±.03
X.XXX: ±.015
ANGULAR: ±1°
DEBURR ALL SHARP EDGES.
ALL MACHINED SURFACES TO HAVE A 125 RMS FINISH UNLESS NOTED OTHERWISE.
THIRD ANGLE PROJECTION

DRAWN BY:	TAK
CHECKED BY:	VD
PROTOTYPE BY:	TAK
PROTOTYPE DATE:	10/5/2016
APPROVED FOR PRODUCTION BY:	TAK
PRODUCTION DATE:	10/26/2016

SALCO PRODUCTS, INC.

PART NAME: PIPE ELBOW 4" TTMA X3"X90°

MATERIAL: SALCO PE

PROJECT #: H161004 | SHEET #: 1 OF 1 | SCALE: 1:1

DRAWING #: E44415 | PART #: HS4X3X90PE13

THIS PRINT, PROPERTY OF SALCO PRODUCTS INC, CONTAINS PROPRIETARY INFORMATION AND MUST NOT BE COPIED, REPRODUCED, OR USED DETRIMENTALLY TO OUR INTEREST.